THIS DRAWING IS UNPUBLISHED. RELEASED FOR PUBLICATION - ,- .
© COPYRIGHT - By - ALL RIGHTS RESERVED.

REVISIONS

P	LTR	DESCRIPTION	DATE	DWN	APVD
	W3	REVISED PER ECR-15-014064	03MAR2016	NK	NL

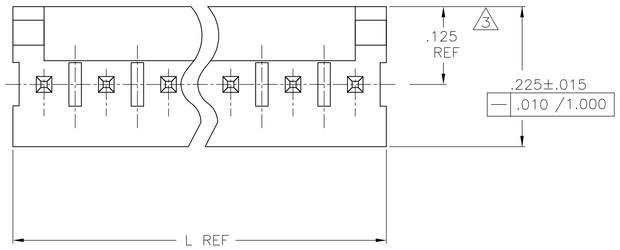

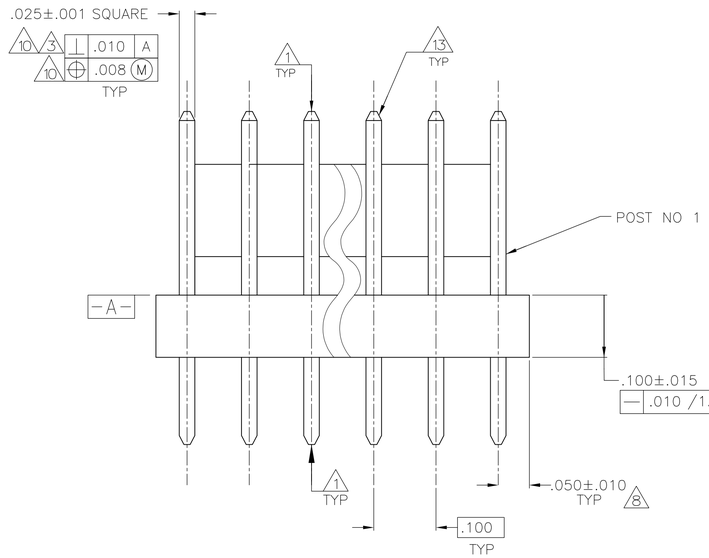

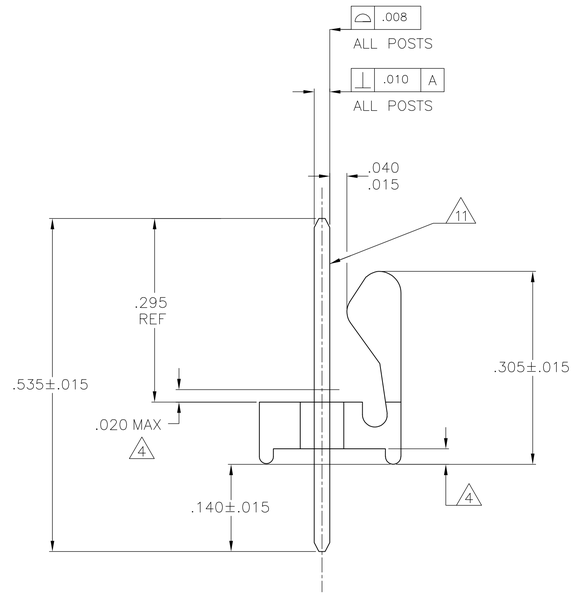

1. POST TO WITHSTAND 13 NEWTONS (3 LBS) MIN. AXIAL FORCE IN BOTH DIRECTIONS SHOWN WITHOUT DISLODGING.
2. TOLERANCES APPLY TO SOLDER SIDE OF BOARD.
3. MEASURED AT SURFACE — A —
4. PLASTIC FLASH PERMITTED IN THIS AREA.
5. PARTS COMPLY WITH AMP SOLDERABILITY SPEC. NO. 109-11-2.
6. ONE HOLE MAY BE UNDERSIZED(ø.032-.035) FOR ASSEMBLY RETENTION DURING WAVE SOLDERING.
7. MATERIAL: HEADER-THERMOPLASTIC POLYESTER UL94V-0(NATURAL)
   POST-COPPER ALLOY (TIN-PLATED)
8. COORDINATE DIMENSION APPLIES FROM CENTER OF ACTUAL FEATURE.
9. PLASTIC BURRS CAUSED BY CUT-OFF TOOLING ARE PERMITTED WITHIN THE MAXIMUM TOLERANCE ENVELOPE.
10. POSTS TO BE MEASURED WHEN STRIP IS HELD FLAT.
11. POSTS MUSTS WITHSTAND TWO 90° BENDS AGAINST EXTRUSION WITHOUT BREAKING.
12. DIMENSION SHOULD BE .130 MIN WHEN MATING WITH A MTA 100 CONNECTOR ASSEMBLY OR A CST 100 CONNECTOR.
13. PIN BURR OF .005 MAX. VERTICAL AND .003 MAX. HORIZONTAL PERMITTED AT POST TIPS ON BOTH ENDS.

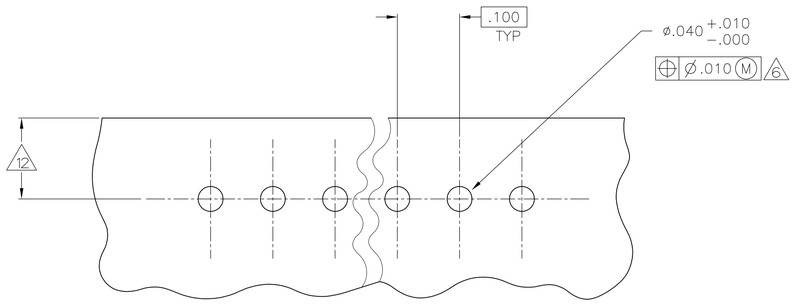

RECOMMENDED MOUNTING HOLE PATTERN FOR .063 THICK P.C. BOARD 2

		1.000	25.40
.035	0.89	.535	13.59
.032	0.81	.310	7.87
.025	0.64	.295	7.49
.020	0.51	.225	5.72
.015	0.38	.140	3.56
.010	0.25	.130	3.30
.008	0.20	.125	3.18
.005	0.13	.100	2.54
.003	0.08	.063	1.60
.001	0.03	.050	1.27
.000	0.00	.040	1.02
IN	MM	IN	MM

CONVERSION TABLE

L IN	L MM	NO OF POSITIONS	PART NUMBER
2.800	71.12	28	2-640456-8
2.700	68.58	27	2-640456-7
2.600	66.04	26	2-640456-6
2.500	63.50	25	2-640456-5
2.400	60.96	24	2-640456-4
2.300	58.42	23	2-640456-3
2.200	55.88	22	2-640456-2
2.100	53.34	21	2-640456-1
2.000	50.80	20	2-640456-0
1.900	48.26	19	1-640456-9
1.800	45.72	18	1-640456-8
1.700	43.18	17	1-640456-7
1.600	40.64	16	1-640456-6
1.500	38.10	15	1-640456-5
1.400	35.56	14	1-640456-4
1.300	33.02	13	1-640456-3
1.200	30.48	12	1-640456-2
1.100	27.94	11	1-640456-1
1.000	25.40	10	1-640456-0
.900	22.86	9	640456-9
.800	20.32	8	640456-8
.700	17.78	7	640456-7
.600	15.24	6	640456-6
.500	12.70	5	640456-5
.400	10.16	4	640456-4
.300	7.62	3	640456-3
.200	5.08	2	640456-2

THIS DRAWING IS A CONTROLLED DOCUMENT.

DIMENSIONS: INCHES

TOLERANCES UNLESS OTHERWISE SPECIFIED:
0 PLC ± –
1 PLC ± –
2 PLC ± –
3 PLC ± .005
4 PLC ± –
ANGLES: ± 0°30'

MATERIAL 7 FINISH 7

DWN K. WHITAKER 11JUN2004
CHK D. BOSSI 11JUN04
APVD D. BOSSI 11JUN04
PRODUCT SPEC —
APPLICATION SPEC —
WEIGHT —

TE Connectivity

NAME MTA-100 HDR ASSY, POLARIZED, NOTCHED, .025 SQUARE STRAIGHT POST, TIN PLATED

SIZE A1 | CAGE CODE 00779 | DRAWING NO C-640456 | RESTRICTED TO —

CUSTOMER DRAWING | SCALE 8:1 | SHEET 1 OF 1 | REV W3

4805 (1/15)